PROJECT REFERENCE NO.	SHEET NO.
SR-5001CB	2-J

Bollard Special Detail Sheet (Page 2 of 2)

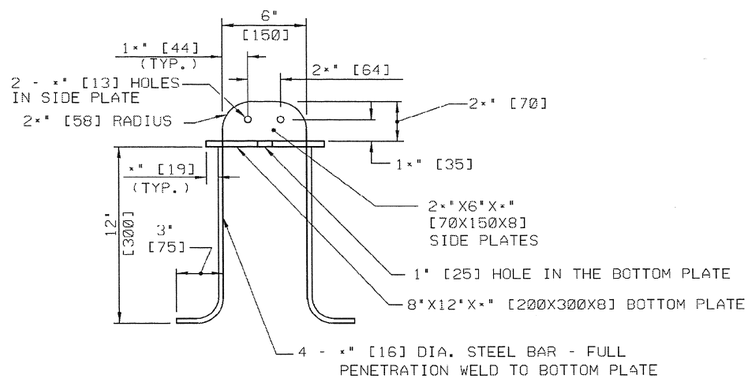

SECTION

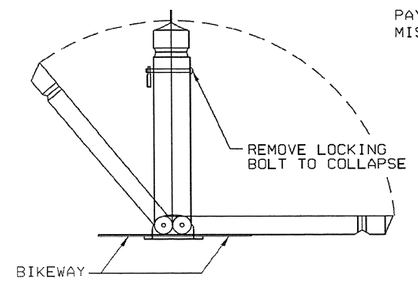

ORIENTATE BOLLARD TO OPEN
PARALLEL TO CENTERLINE OF PATH.

BOLLARD DETAIL

NOTES

MATERIALS: IN ORDER TO ENSURE THAT THE BOLLARD STAYS PLUMB AND IN PLACE, MAKE THE FITTINGS AS TIGHT AS POSSIBLE. IF MADE OF WOOD, CONSTRUCT THE BOLLARD USING CCA PRESSURE TREATED SOUTHERN YELLOW PINE. PRESSURE TREAT AS SPECIFIED IN CMS 712.06. HOT-DIP GALVANIZE ANY HARDWARE AND STEEL USED FOR THE BOLLARD.

PAYMENT PAYMENT FOR THE BOLLARD SHALL BE ITEM SPECIAL - BOLLARD, MISC., HINGED

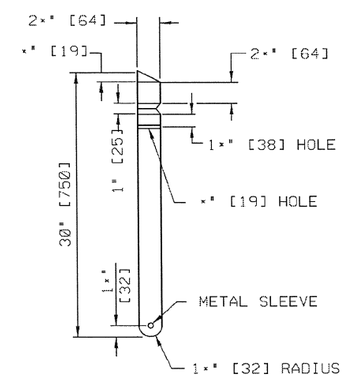

DETAIL OF TIMBER

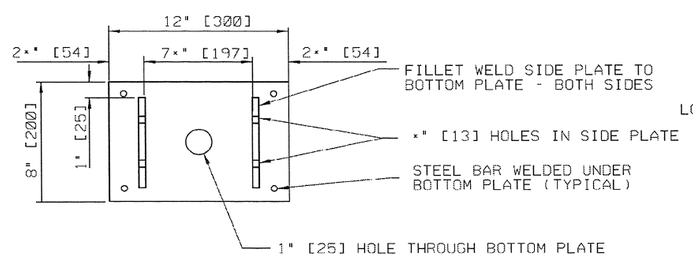

PLAN

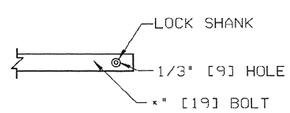

DETAIL OF HOLE FOR LOCK

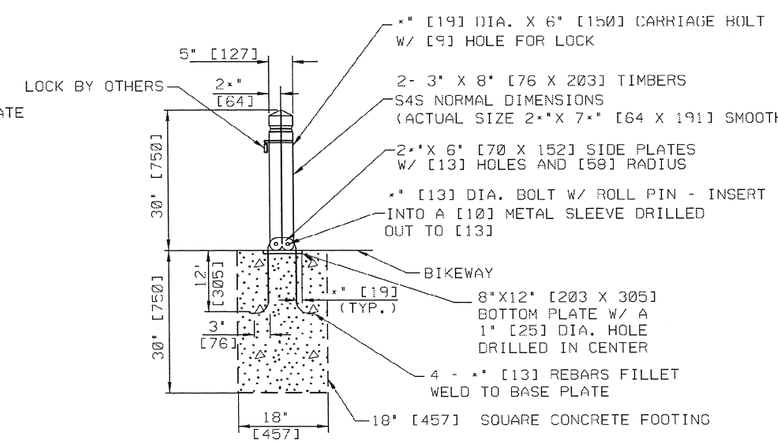

SECTION

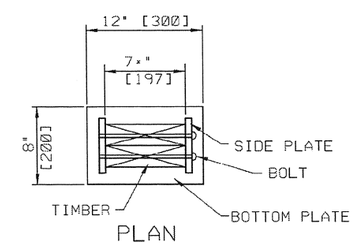

PLAN

REVISIONS

THIS DRAWING REPLACES RM-5.1M DATED 1-3-96.

OHIO DEPARTMENT OF TRANSPORTATION
ROADWAY DESIGN ENGINEER
4-18-03
DATE

STDS. ENGR.
FOCKE

ALL METRIC DIMENSIONS (IN BRACKETS [ ]) ARE IN MILLIMETERS UNLESS OTHERWISE NOTED.

ROADWAY ENGINEERING SERVICES

STANDARD ROADWAY CONSTRUCTION DRAWING

STEEL BOLLARDS

NUMBER
RM-5.1

2/2