PROJECT REFERENCE NO.	SHEET NO.
SR-5001CB	2-D

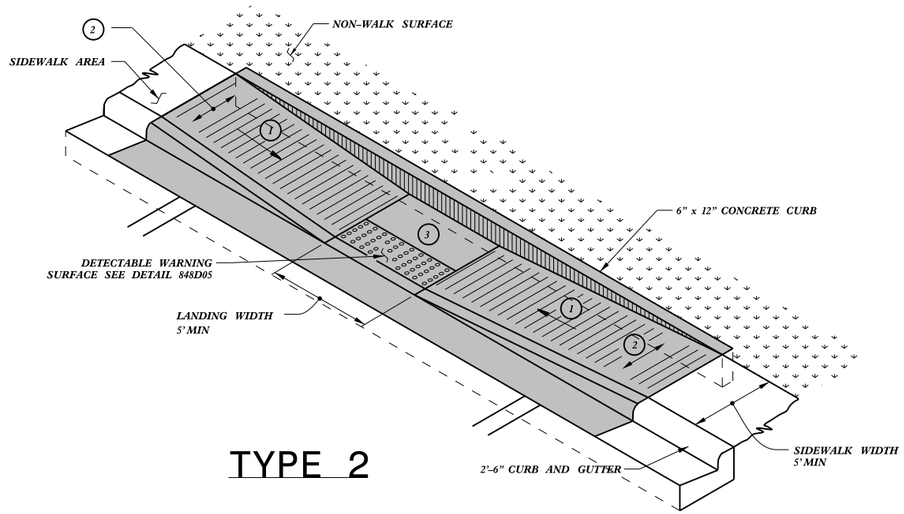

TYPE 2

PAY LIMITS FOR CURB RAMP

1. 8.33% (12:1) MAX RAMP SLOPE
2. CROSS SLOPE: 2.00%
3. CURB RAMPS REQUIRE A (4'-0") MINIMUM LANDING WITH A MAXIMUM CROSS SLOPE AND LONGITUDINAL SLOPE OF 2.00% WHERE PEDESTRIANS PERFORM TURNING MANEUVERS. SLOPE TO DRAIN TO CURB.

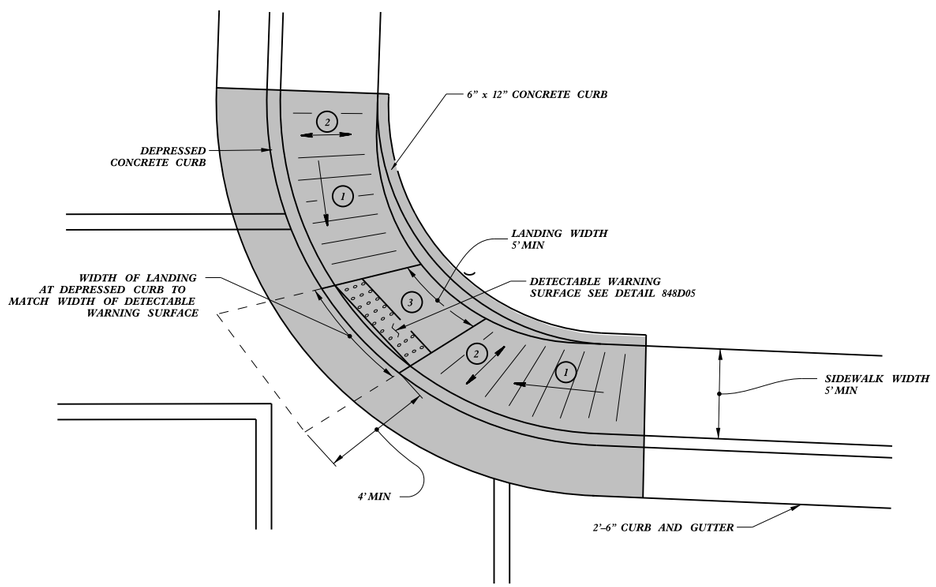

TYPE 2A

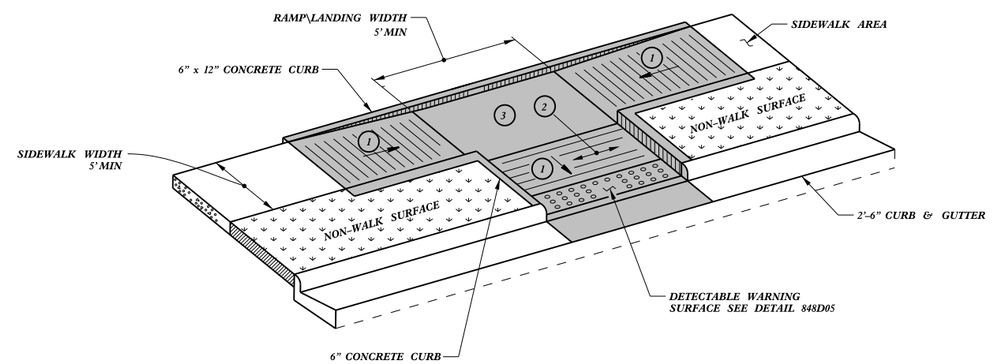

TYPE 3

REFER TO ROADWAY STANDARD DRAWING NUMBER 848.05 SHEET 3 OF 3 FOR ALL RAMP NOTES

CONTRACT STANDARDS AND DEVELOPMENT UNIT
Office 919-707-6950 FAX 919-250-4119

CURB RAMPS

Parallel Ramps

ORIGINAL BY: J.S. HOWERTON DATE: 7/7/11
MODIFIED BY: DATE:
CHECKED BY: DATE:
FILE SPEC.: stds/2012CurbRamp/CurbRampDetails.dgn

5/14/99
22-MAR-2012 15:07
S:\Contracts\Contracts\Special Details\jhowerton\Standard Drawings\2012 Standard Drawings\2012 Curb Ramp Special Details\Curb Ramp Details.dgn
jhowerton AT CSD237501